INSTALLATION MANUAL

System: KB05

Please read all instructions carefully before installation.

Check List Before Installation:

- ✓ Test water for purity, unusual PH and/or acidic levels. Check with your local health department for test procedures.
- ✓ Test well draw down. KB series systems **CAN NOT** run dry. This will cause damage.
- ✓ Measure the diameter of the well casing to insure you have the proper size well seal. KB05 System requires a minimum 4IN well casing inside diameter (ID).

Tools Needed:

- o Posthole Digger
- o Adjustable Pliers
- o Screwdrivers: Flat and Phillips
- o Electrical Terminal Crimpers
- o Knife
- o Level
- o Small awl or Drill bit
- o Ratchet and sockets 3/8, 7/16, ½, 9/16
- o Wrenches: 5/16, 7/16, 9/16
- o Pipe Cutters

Additional Items:

- o 6-8 Bags of concrete approximately 80 lbs.
- o 3 Gallons of Water
- o 4-1/2IN OD SCH40 x 10FT LG Pipes (2qty)
- o Electrical Tape
- o Well Seal to fit your well casing
- o Down hole pipe properly sized for flow rate
- o PVC Primer and Glue (when using PVC pipe)
- o Fittings and Adapters for down hole pipe

Specs:

Maximum Depth:	600 Feet or 260 PSI
Minimum Flow Rate at Max. Depth:	2.0 GPM
Maximum Flow Rate:	7.5 GPM

Model 5GS10

VIEW PUMP PART NUMBER FOR CORRECT FLOW LINE ON TOP OF PAGE 2

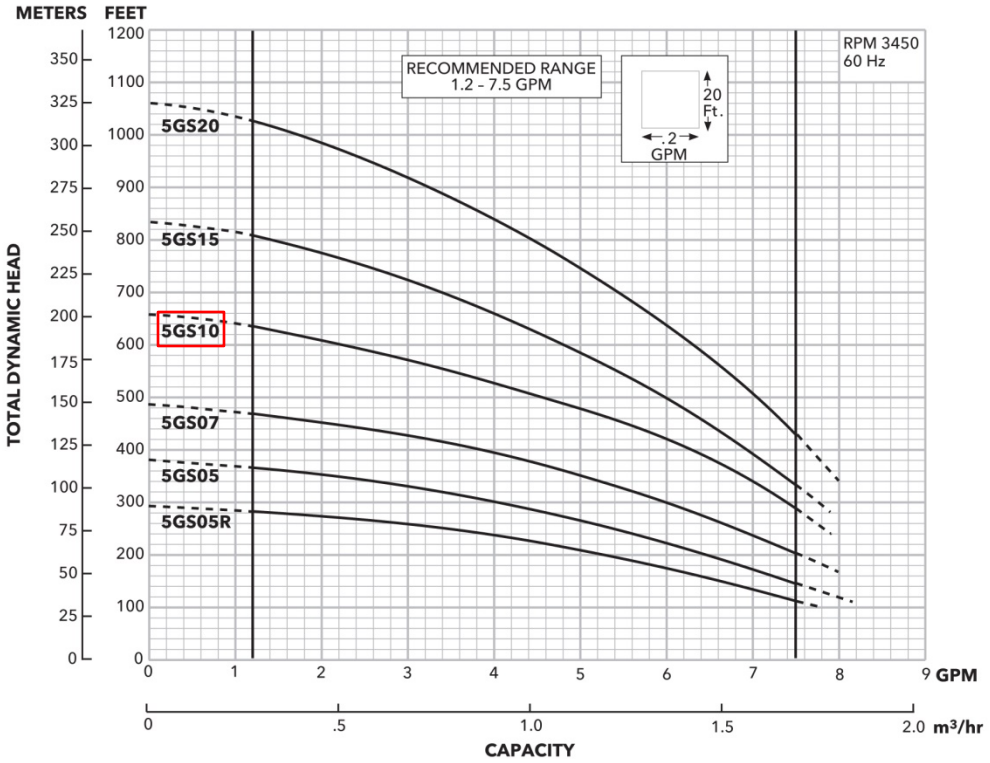

1-866-519-7892
solarpumps.com

Shipping/ Freight Address: 1520 E. Eagle Rd. Weatherford OK, 73096
Payment & Billing Address: PO Box 1937 Weatherford OK, 73096

System Products Included:

QTY	Part Number	Item Description
2	KC10	72 Cell Solar Modules with Mounting Assembly
1	Goulds 5GS10	1.0HP Water Pump, 100FT Wire
1	SB2HP-DS	Solar Boss Drive 2HP, DC Disconnect built in.
3		Jumpers Wiring Harnesses
1	KB05M	Manuals- also available online at solarpumps.com/resources/tech-docs

Important Steps Before Installing & Troubleshooting on *page 6*.

Installing Your Solar Array-

FIGURE 1.A

1. Dig a hole using posthole diggers or shovel approximately 3 feet deep and 8-12 inches minimum in diameter near the well for 4-1/2IN OD x 10FT long.

   FOR MULTI-POLE INSTALLS: Be sure to properly space each pole at least 84IN minimum apart to avoid overlapping of solar arrays, reference **FIGURE.3A**.

   If there is an existing windmill, dig the hole approximately 4FT south of it. This will insure that no shadows from the windmill will fall across the face of the module.

   Tip: The South, West, and East (North of Equator references) of the well to make sure there are no shadows from trees, etc. to cause a power loss. The solar array can be placed away from the well if required. Use larger gauge wire for longer distances.

2. Set the pole using quick setting concrete mixed with water to fill in the hole around the pole. Make sure the pole is plumb using a level. View illustration below.

3. While your concrete and poles are drying, drive your *Ground Rod near the pole* (but not in the concrete) and prepare your pump to be installed.

4. Once, your poles are set and the **concrete is dried**; place your solar array with mounts on top of the pole. If your solar array did not come pre-assembled with mounts please view **FIGURE 4.A** for mount assembly first.

5. Adjust your solar array to face full midday sun and tighten set bolts & pivot bolt on tube mount with 9/16" wrench. *Note: When tightening the pivot bolt, do not spin the nut. Tighten the bolt head side and not the nut.*

FIGURE 2.A

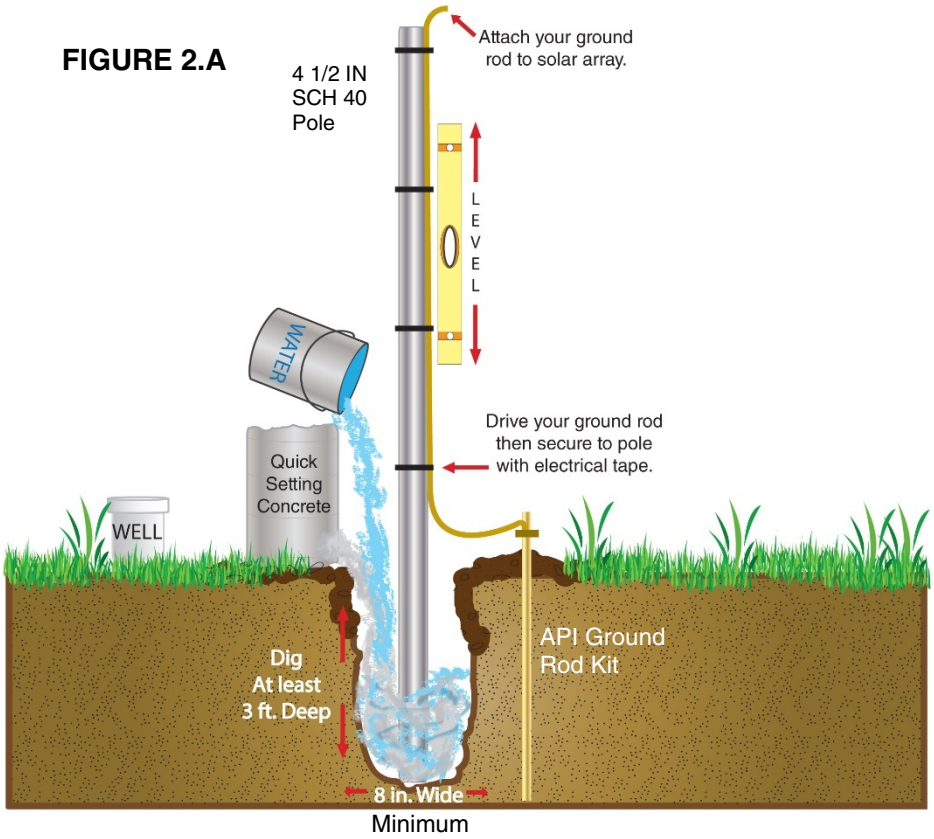

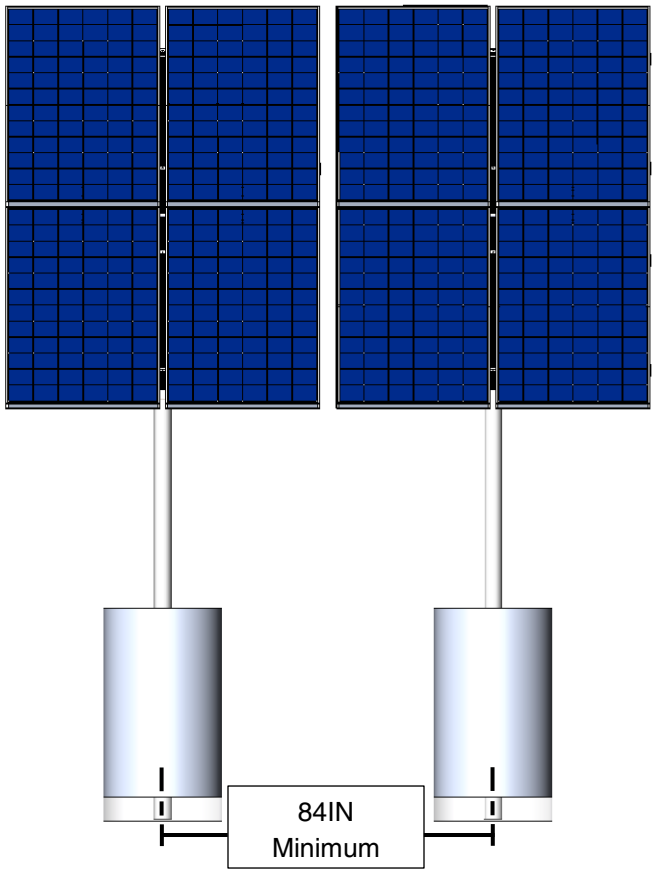

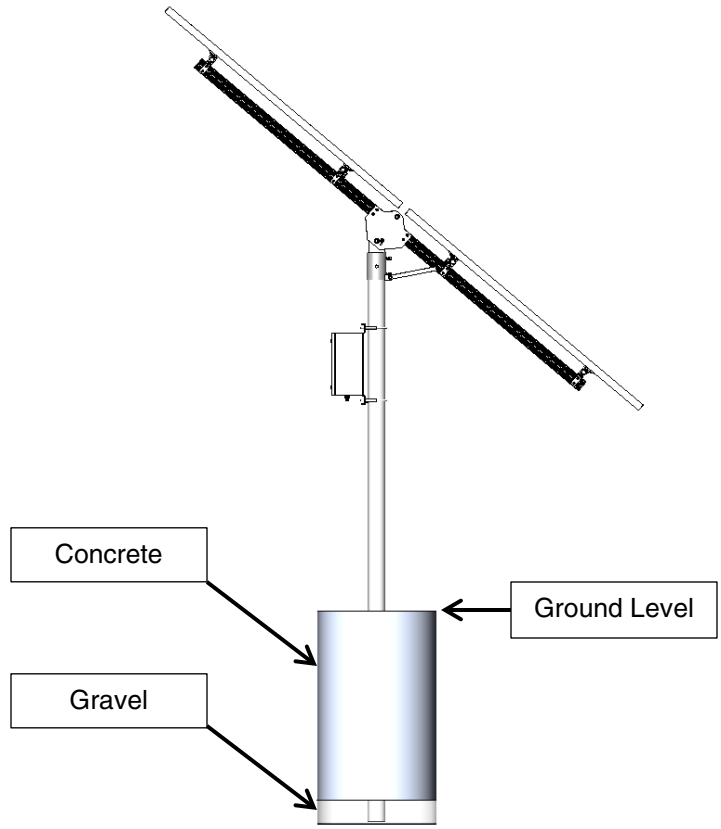

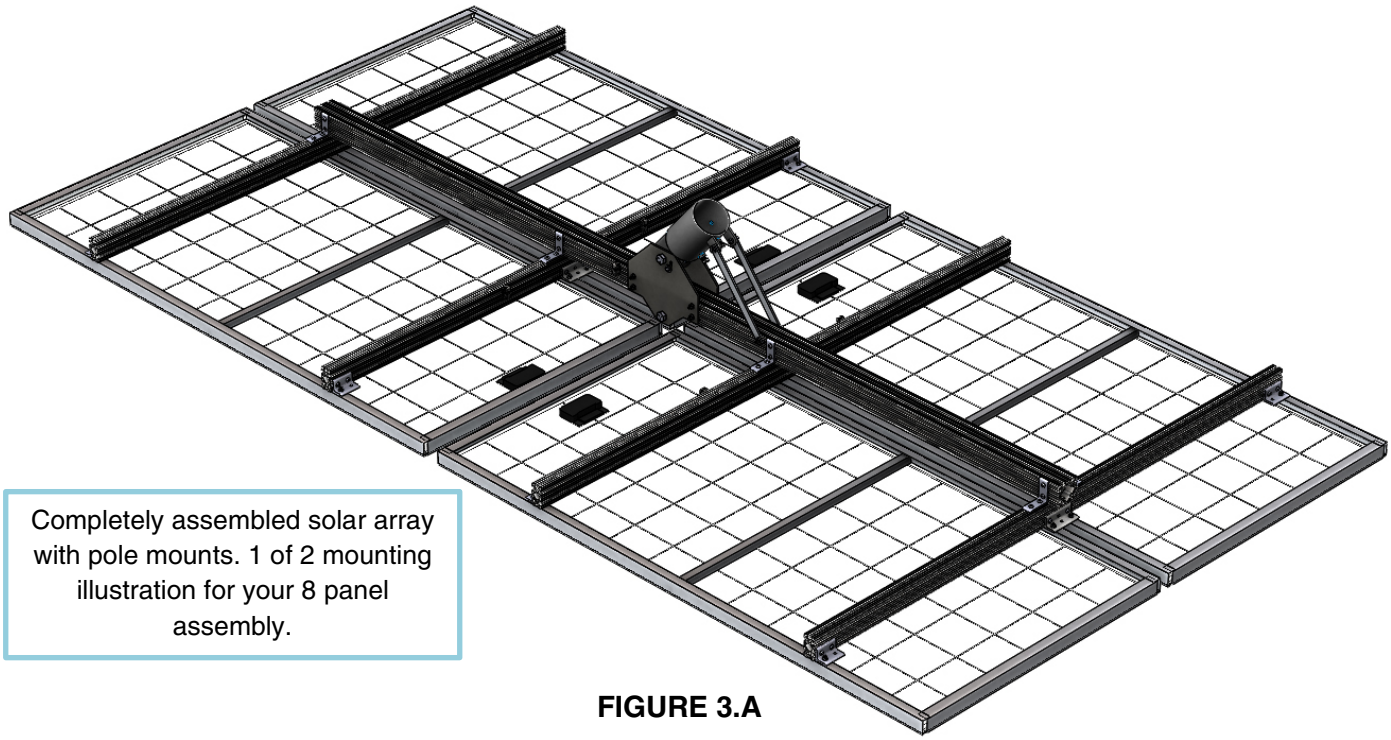

Completely assembled solar array with pole mounts. 1 of 2 mounting illustration for your 8 panel assembly.

FIGURE 3.A

KB05 MOUNT ASSEMBLY

Build of Materials for Pole Mounts-FIGURE 4.A

Legend	QTY	Part Number	Item Description
1	8	802056	3.0IN X 3.0IN 8020 4 HOLE ANGLE BRACKET
2	4	802056	1.5IN X 1.5IN 8020 6 HOLE ANGLE BRACKET
3	8	802056	1.5IN X 1.5IN 8020 4 HOLE ANGLE BRACKET
4	2	535410	LG PIPE MOUNT PLATE
5	56	802056	0.313-18IN SLOT NUT
6	4	802056	1530 X 79IN LG CROSS BEAM
7	1	802056	3030 X 127IN LG MAIN BEAM
8	4	See Panel	72 Cell Premium Solar Panel *(Check back of panel for specs)*
9	16	915518	HHCS--0.250-20 X 0.75IN
10	56	802056	BHCS--0.313-18 X 0.625IN
11	2	915528	FLAT WASHER--0.375IN
12	10	535704	RHCS--0.313-18 X 1.0IN
13	10	535529	HEX FLANGE NUT SR--0.313-18IN
14	16	915519	HEX FLANGE NUT SR--0.250-20IN
15	2	915553	SPLIT LOCK WASHER--0.75-10IN
16	2	915552	HHCS--0.75-10 X 5.0IN
17	1	535410	5.5IN OD X 4.625IN ID PIPE MOUNT
18	4	915527	HHCS--0.375-16 X 1.0IN
19	4	915550	HEX FLANGE NUT SR--0.375-16IN
20	2	915554	HEX NUT--0.75-10IN
21	2	135150	WIND BRACE
22	3	916510	HHCS--0.500-13 X 1.0IN
23	6	535415	8020 WIRE CLAMP

1 of 2 mounting illustration for your 8 panel assembly.

NOTE BEFORE INSTALLING MOUNTING:

For ***Part#21*** (Windbrace) and ***Part#4*** (LG Pipe Mount Plate)

- Slide ***Part#12*** (0.313-18 X 1.0IN Carriage Bolts) in the channel of ***Part#7*** frame work before installing ***Part#1*** (3x3IN 4 Hole Angle Bracket).

FIGURE 4.A

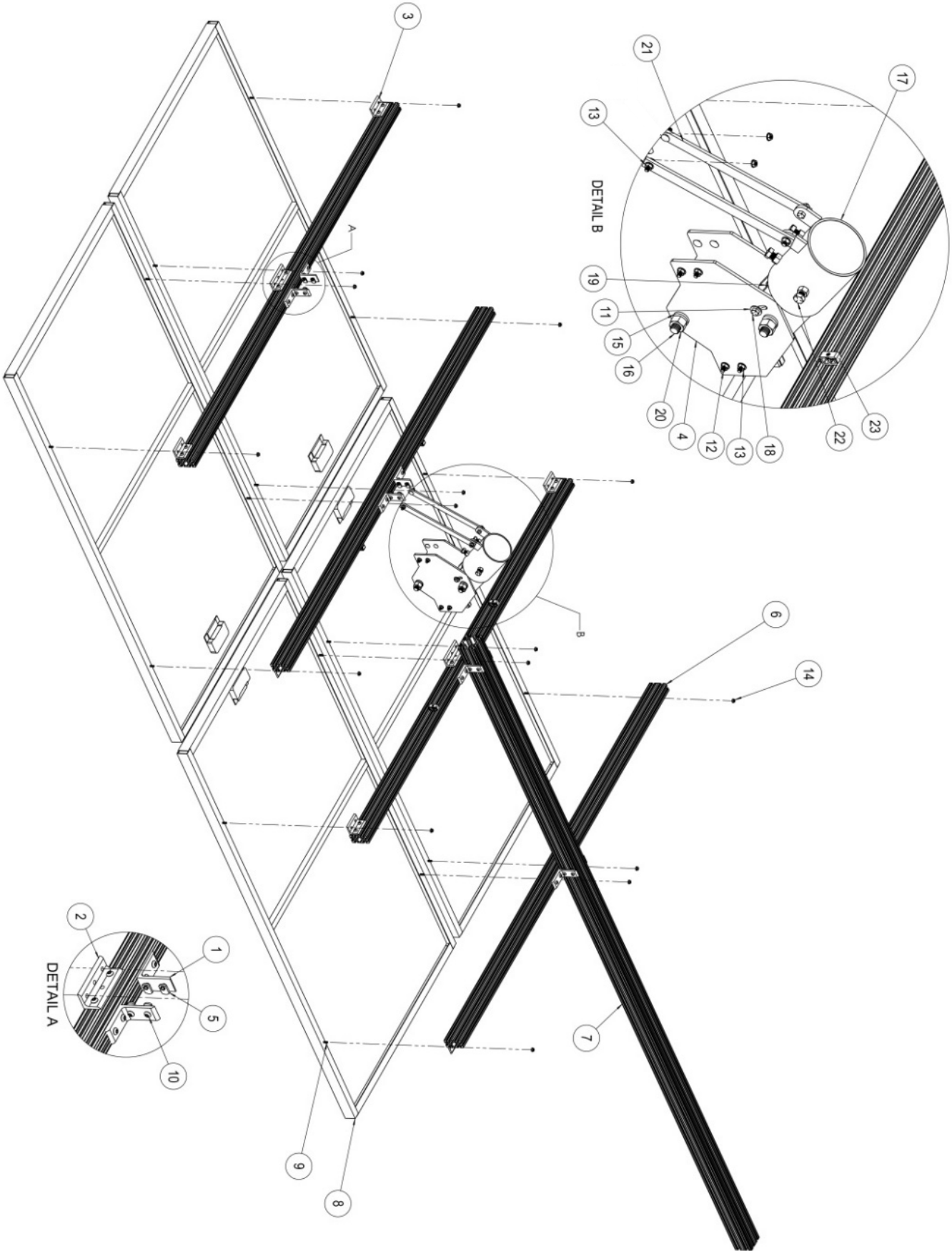
DETAIL B
DETAIL A
A
B
1
2
3
4
5
6
7
8
9
10
11
12
13
14
15
16
17
18
19
20
21
22
23

Shipping/ Freight Address: 1520 E. Eagle Rd. Weatherford OK, 73096
Payment & Billing Address: PO Box 1937 Weatherford OK, 73096

JULY 2018 REV-C

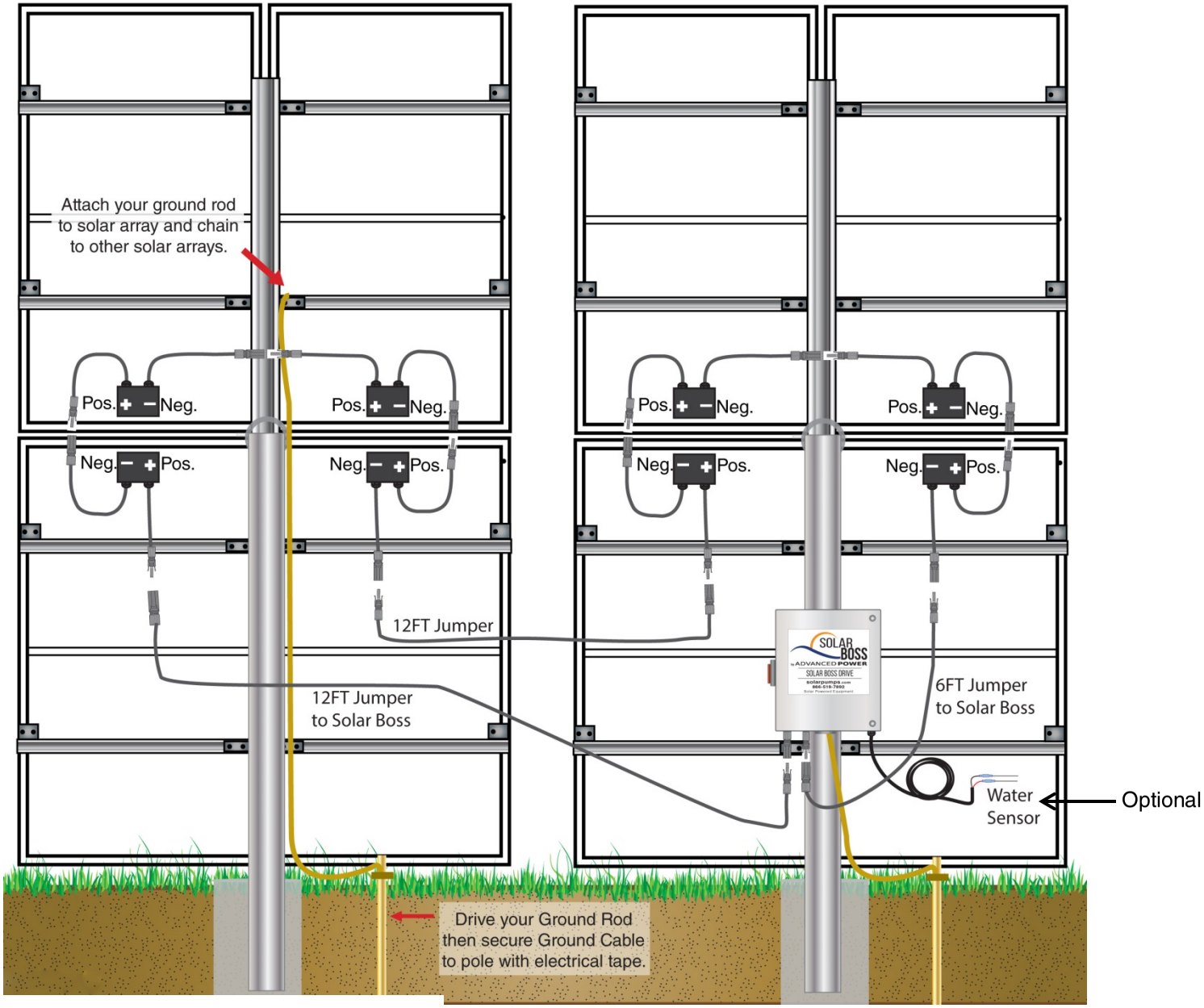

KB05 WIRE ASSEMBLY

Build of Materials for Wiring-FIGURE 5.A

- We suggest you use a licensed technician when installing or assembling the system as you are dealing with HIGH VOLTAGE.
- API is not liable for damages or harm done to persons or equipment.
- **WARNING: Turn High Volt systems to OFF on On/Off Power Switch (mounted on Solar Boss Drive) when assembling.**

In order to show details, the illustrations are not to actual scale.

1-866-519-7892
solarpumps.com

TROUBLE SHOOTING

If you experience issues while installing your product or trouble shooting, please contact our technicians so we can assist you.

- Check the solar module for any damages.
- Check for Shadows, there should be no shadows falling across the face of the module at any time during the day whether permanent or temporary.
- Check the direction on how the solar module faces, it should be pointed at the Sun during mid-day or peak sunlight hours.
- Check the wiring and connections. Confirm there is no damage to exterior jacket or internal pins of connections. Open the junction box(es) on the solar module(s) to confirm tight connections.
- If you have a multimeter available, please check voltage and amperage from solar right during the brightness of sunlight- typically midday. Confirm these readings match the data label on the back of the solar module.

Important Steps When Installing:

- Please be sure your well has been tested for flow rate and continuous flow supply. In order to reach these water demands, your well must be able to keep up with the solar pump. Otherwise, damages can occur.
- Please check for the correct tilt angle for the geographical location where the system will be installed. Reference on how to calculate tilt angle for solar panels https://www.esrl.noaa.gov/gmd/grad/solcalc/
- If needed adjust the solar array 2 to 4 times per year to match the sun. If not, a higher degree of angle will help shed large hail stones and decrease likely hood of damage.
- Do you have wind turbines within 1/2 mile of your solar pump system? Find out why your system can become damaged by speaking with one of our system specialists.
- Don't forget to prep your system for the winter!! Drain or weep holes are a must!
- Ground Rods help to preventing damage from lightening spikes; we highly recommend installing a ground rod for your solar systems.
- See Pump Manual for plug connector illustrations. Be certain of plug connector alignment, do not force, damage may occur.

View our website for video installs, quick tips and more!

Please view our Return Policy at https://solarpumps.com/repair-policy